RAILROAD STOP SIGN

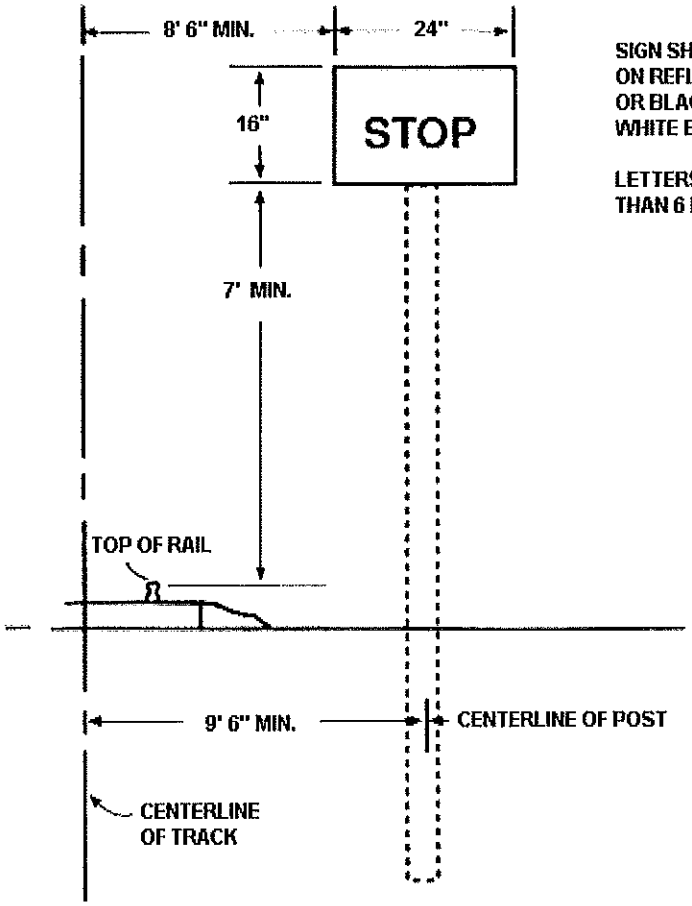

SIGN SHALL HAVE WHITE LETTERS ON REFLECTIVE RED BACKGROUND OR BLACK LETTERS ON REFLECTIVE WHITE BACKGROUND.

LETTERS SHALL BE NOT LESS THAN 6 INCHES HIGH.

OAR 741-110-0030(2) (a)
OAR 741-110-0040(2)

FIGURE 1
MARCH 2013

HIGH LEVEL WARNING DEVICE

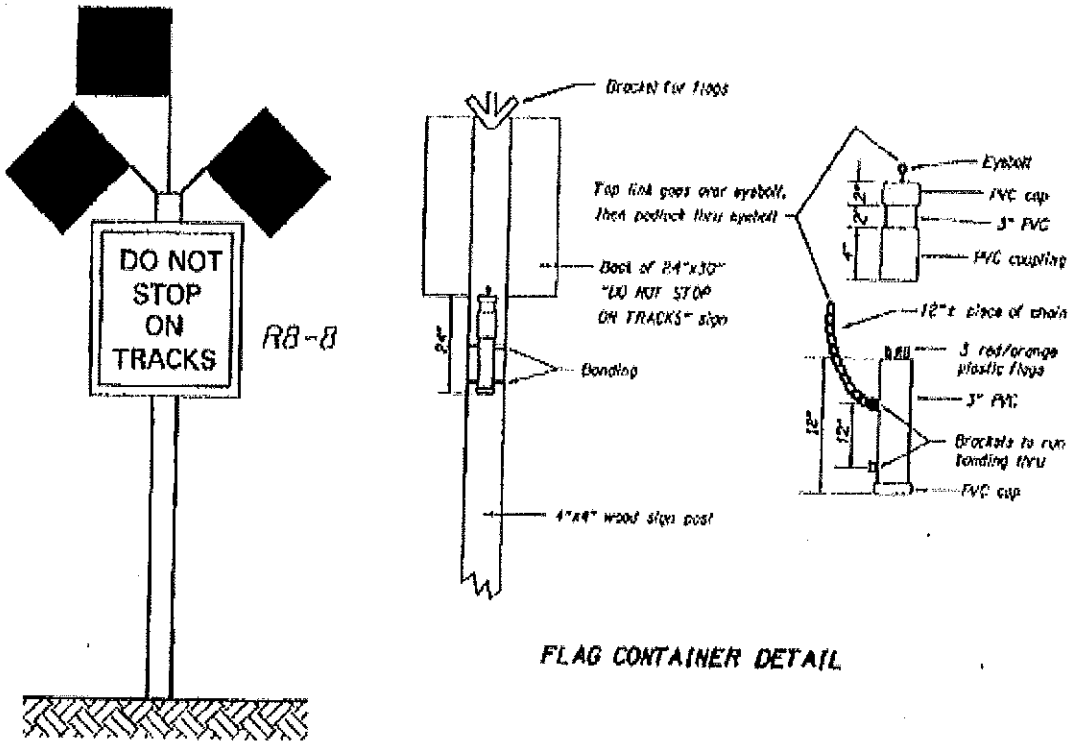

When flags on the DO NOT STOP ON TRACKS sign are displayed pursuant to OAR 741-115-0040, they shall be clearly visible at the crossing until the vehicle traffic signals have been repaired.

OAR 741-115-0040(1) (b)

FIGURE 2
MARCH 2013

TRAIN-ACTIVATED
ADVANCE WARNING DEVICE

FOR SIGN DETAILS, SEE DRAWING NO. OW15-14 IN
THE DEPARTMENT'S SIGN POLICY AND GUIDELINES
FOR THE STATE HIGHWAY SYSTEM

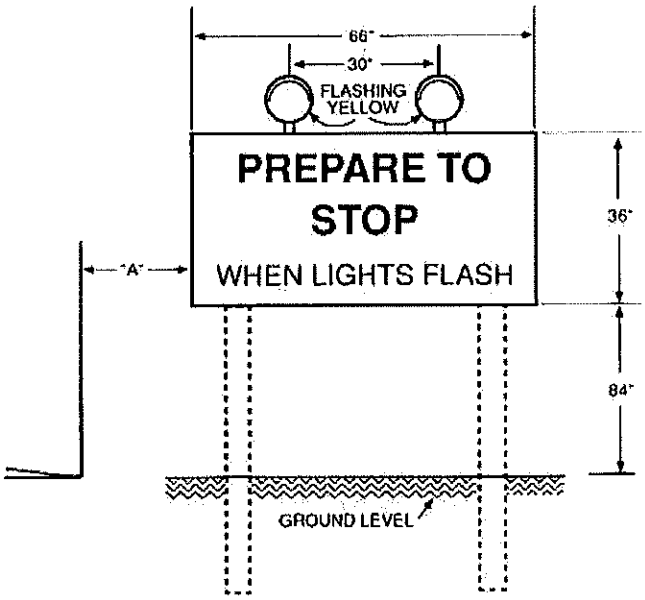

"A" = NOT LESS THAN 2 FEET NOR MORE THAN 3 FEET
FROM CURB FACE OR NOT LESS THAN 6 FEET NOR
MORE THAN 7 FEET FROM THE OUTER EDGE OF SHOULDER.

OAR 741-110-0030(5) (a)
OAR 741-110-0040(5)

FIGURE 3
MARCH 2013

ILLUMINATION

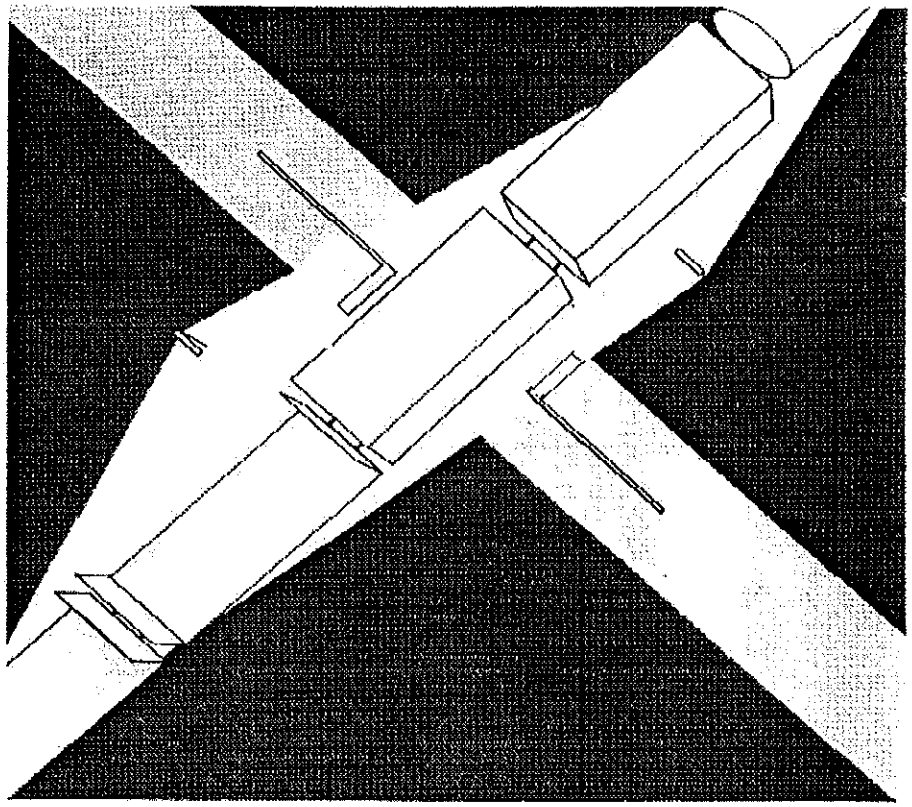

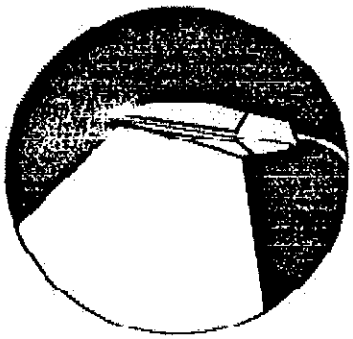

CUT-OFF LUMINAIRE

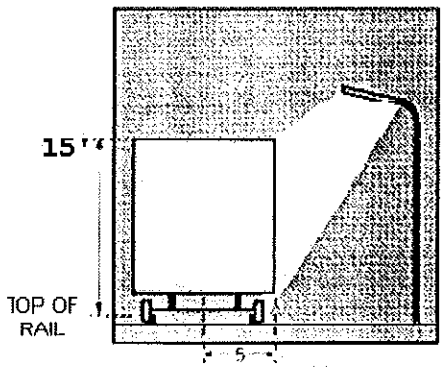

AREA TO BE COVERED
BY LUMINAIRE

OAR 741-110-0030(2) (c)
OAR 741-110-0040(8)

FIGURE 4
MARCH 2013

PRIVATE CROSSING
STOP SIGN DETAIL

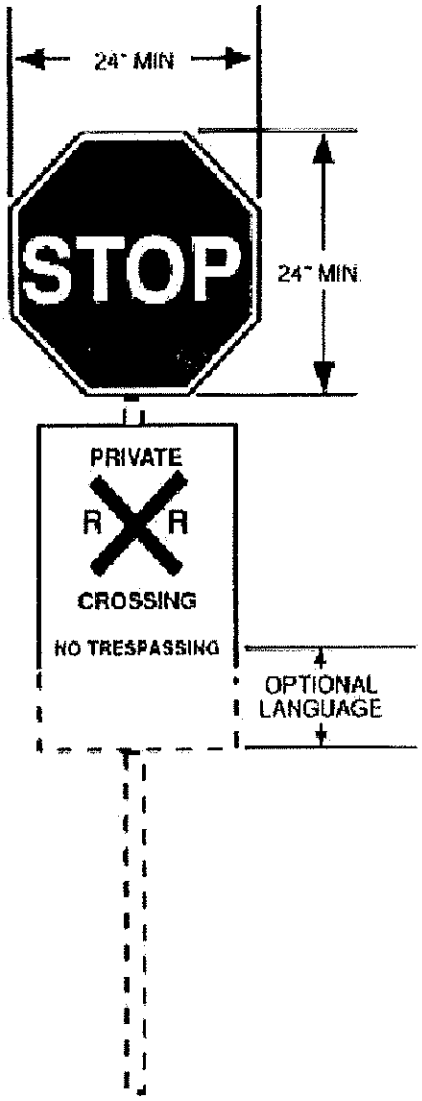

OAR 741-115-0060 (1) (2)

FIGURE 5
MARCH 2013